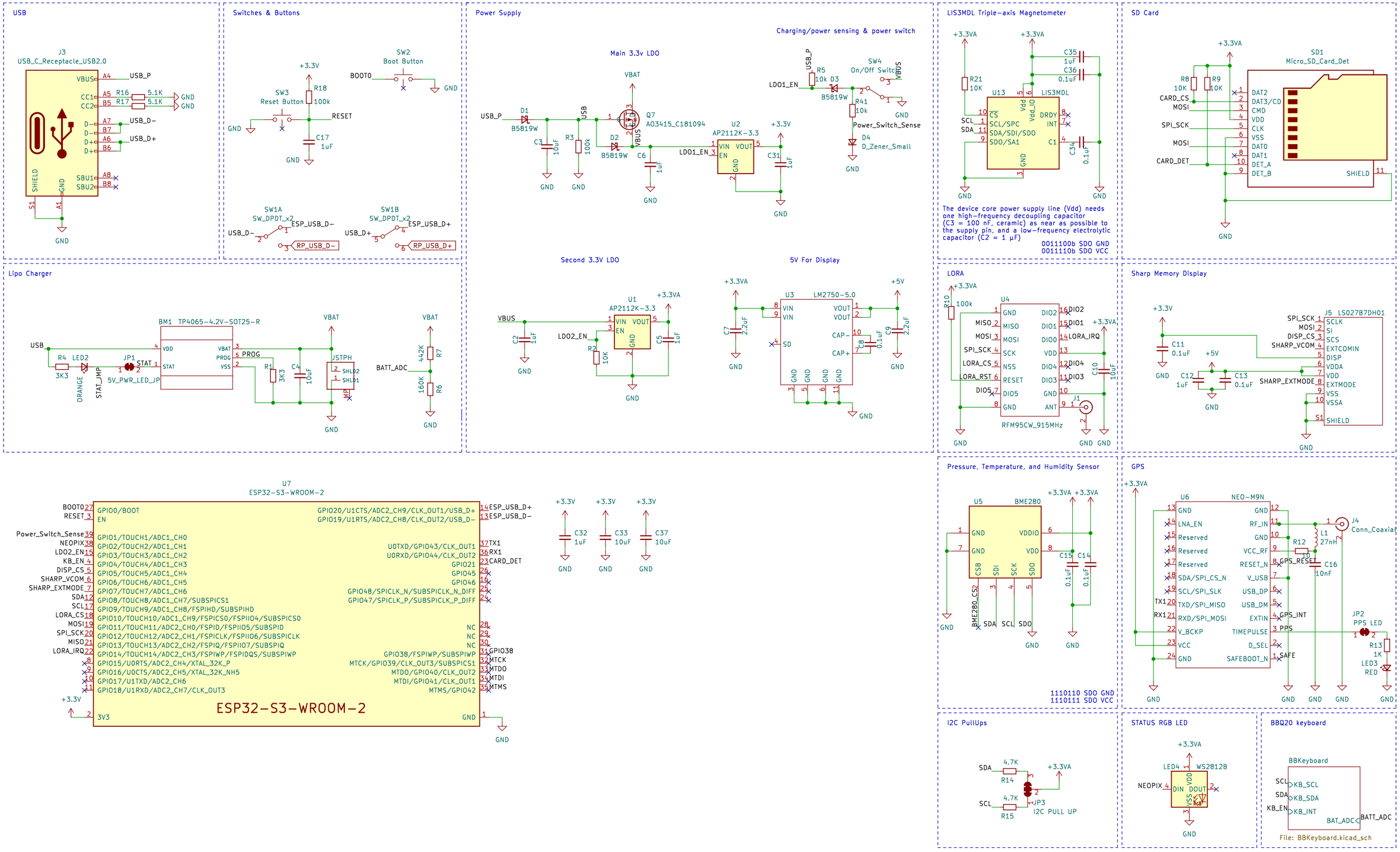
USB
J3
USB_C_Receptacle_USB2.0
VBUS
CC1
CC2
D-
D+
SHIELD
GND
USB_P
USB_D-
USB_D+
R16 5.1K
R17 5.1K
Switches & Buttons
SW2
Boot Button
BOOT0
SW3
Reset Button
R18 100k
RESET
C17 1uF
SW1A
SW_DPDT_x2
ESP_USB_D-
RP_USB_D-
SW1B
SW_DPDT_x2
ESP_USB_D+
RP_USB_D+
Power Supply
Main 3.3v LDO
VBAT
D1
B5819W
C3 10uF
R3 100k
D2
B5819W
Q7
AO3415_C181094
C6 1uF
U2
AP2112K-3.3
LDO1_EN
VIN
VOUT
EN
GND
C31 1uF
+3.3V
Charging/power sensing & power switch
R5 10k
D3
B5819W
SW4
On/Off Switch
R41 10k
Power_Switch_Sense
D4
D_Zener_Small
Second 3.3V LDO
U1
AP2112K-3.3
LDO2_EN
R2 10K
C2 1uF
C5 1uF
5V For Display
U3
LM2750-5.0
VIN
VOUT
SD
CAP-
CAP+
C7 2.2uF
C8 0.1uF
C9 2.2uF
+5V
LIS3MDL Triple-axis Magnetometer
U13
LIS3MDL
R21 10K
C35 1uF
C36 0.1uF
C34 0.1uF
SCL
SDA
CS
SCL/SPC
SDA/SDI/SDO
SDO/SA1
Vdd
Vdd_IO
DRDY
INT
C1
The device core power supply line (Vdd) needs one high-frequency decoupling capacitor (C3 = 100 nF, ceramic) as near as possible to the supply pin, and a low-frequency electrolytic capacitor (C2 = 1 µF)
0011100b SDO GND
0011110b SDO VCC
SD Card
SD1
Micro_SD_Card_Det
R8 10K
R9 10K
CARD_CS
MOSI
SPI_SCK
MOSI
CARD_DET
DAT2
DAT3/CD
CMD
VDD
CLK
VSS
DAT0
DAT1
DET_A
DET_B
SHIELD
Lipo Charger
BM1 TP4065-4.2V-SOT25-R
USB
R4 3K3
LED2
ORANGE
JP1
STAT_JMP
STAT
5V_PWR_LED_JP
VDD
VBAT
PROG
VSS
R1 3K3
C4 10uF
JSTPH
SHLD2
SHLD1
MP
BATT_ADC
R7 442K
R6 160K
LORA
U4
RFM95CW_915MHz
R10 100k
MISO
MOSI
SPI_SCK
LORA_CS
LORA_RST
DIO5
GND
NSS
RESET
SCK
DIO2
DIO1
DIO0
DIO4
DIO3
ANT
LORA_IRQ
C10 10uF
J1
Sharp Memory Display
J5 LS027B7DH01
C11 0.1uF
C12 1uF
C13 0.1uF
SPI_SCK
MOSI
DISP_CS
SHARP_VCOM
SCLK
SI
SCS
EXTCOMIN
DISP
VDDA
VDD
EXTMODE
VSS
VSSA
SHARP_EXTMODE
SHIELD
U7
ESP32-S3-WROOM-2
BOOT0
RESET
Power_Switch_Sense
NEOPIX
LDO2_EN
KB_EN
DISP_CS
SHARP_VCOM
SHARP_EXTMODE
SDA
SCL
LORA_CS
MOSI
SPI_SCK
MISO
LORA_IRQ
GPIO00/BOOT
EN
GPIO01/TOUCH1/ADC1_CH0
GPIO02/TOUCH2/ADC1_CH1
GPIO03/TOUCH3/ADC1_CH2
GPIO04/TOUCH4/ADC1_CH3
GPIO05/TOUCH5/ADC1_CH4
GPIO06/TOUCH6/ADC1_CH5
GPIO07/TOUCH7/ADC1_CH6
GPIO08/TOUCH8/ADC1_CH7/SUBSPICS1
GPIO09/TOUCH9/ADC1_CH8/FSPIHD/SUBSPIHD
GPIO10/TOUCH10/ADC1_CH9/FSPICS0/FSPIIO4/SUBSPICS0
GPIO11/TOUCH11/ADC2_CH0/FSPID/FSPIIO5/SUBSPID
GPIO12/TOUCH12/ADC2_CH1/FSPICLK/FSPIIO6/SUBSPICLK
GPIO13/TOUCH13/ADC2_CH2/FSPIQ/FSPIIO7/SUBSPIQ
GPIO14/TOUCH14/ADC2_CH3/FSPIWP/FSPIDQS/SUBSPIWP
GPIO15/U0RTS/ADC2_CH4/XTAL_32K_P
GPIO16/U0CTS/ADC2_CH5/XTAL_32K_NH5
GPIO17/U1TXD/ADC2_CH6
GPIO18/U1RXD/ADC2_CH7/CLK_OUT3
GPIO20/U1CTS/ADC2_CH9/CLK_OUT1/USB_D+
GPIO19/U1RTS/ADC2_CH8/CLK_OUT2/USB_D-
U0TXD/GPIO43/CLK_OUT1
U0RXD/GPIO44/CLK_OUT2
GPIO21
GPIO45
GPIO46
GPIO48/SPICLK_N/SUBSPICLK_N_DIFF
GPIO47/SPICLK_P/SUBSPICLK_P_DIFF
NC
GPIO38/FSPIWP/SUBSPIWP
MTCK/GPIO39/CLK_OUT3/SUBSPICS1
MTDO/GPIO40/CLK_OUT2
MTDI/GPIO41/CLK_OUT1
MTMS/GPIO42
3V3
ESP32-S3-WROOM-2
ESP_USB_D+
ESP_USB_D-
TX1
RX1
CARD_DET
GPIO38
MTCK
MTDO
MTDI
MTMS
C32 1uF
C33 10uF
C37 10uF
Pressure, Temperature, and Humidity Sensor
U5
BME280
VDDIO
VDD
CSB
SDI
SCK
SDO
BME280_CS2
C15
C14
0.1uF
1110110 SDO GND
1110111 SDO VCC
GPS
U6
NEO-M9N
GND
LNA_EN
Reserved
SDA/SPI_CS_N
SCL/SPI_SLK
TXD/SPI_MISO
RXD/SPI_MOSI
V_BCKP
VCC
RF_IN
VCC_RF
RESET_N
V_USB
USB_DP
USB_DM
EXTIN
TIMEPULSE
D_SEL
SAFEBOOT_N
GPS_RESET
GPS_INT
PPS
SAFE
J4
Conn_Coaxial
L1 27nH
R12 10
C16 10nF
JP2
PPS LED
R13 1K
LED3
RED
I2C PullUps
SDA
SCL
R14 4.7K
R15 4.7K
JP3
I2C PULL UP
STATUS RGB LED
LED4
WS2812B
NEOPIX
DIN
DOUT
VDD
VSS
BBQ20 keyboard
BBKeyboard
SCL
SDA
KB_EN
KB_SCL
KB_SDA
KB_INT
BAT_ADC
File: BBKeyboard.kicad_sch
VBAT
PWR_FLAG
+3.3V
+3.3VA
+5V
https://
https://
https:/

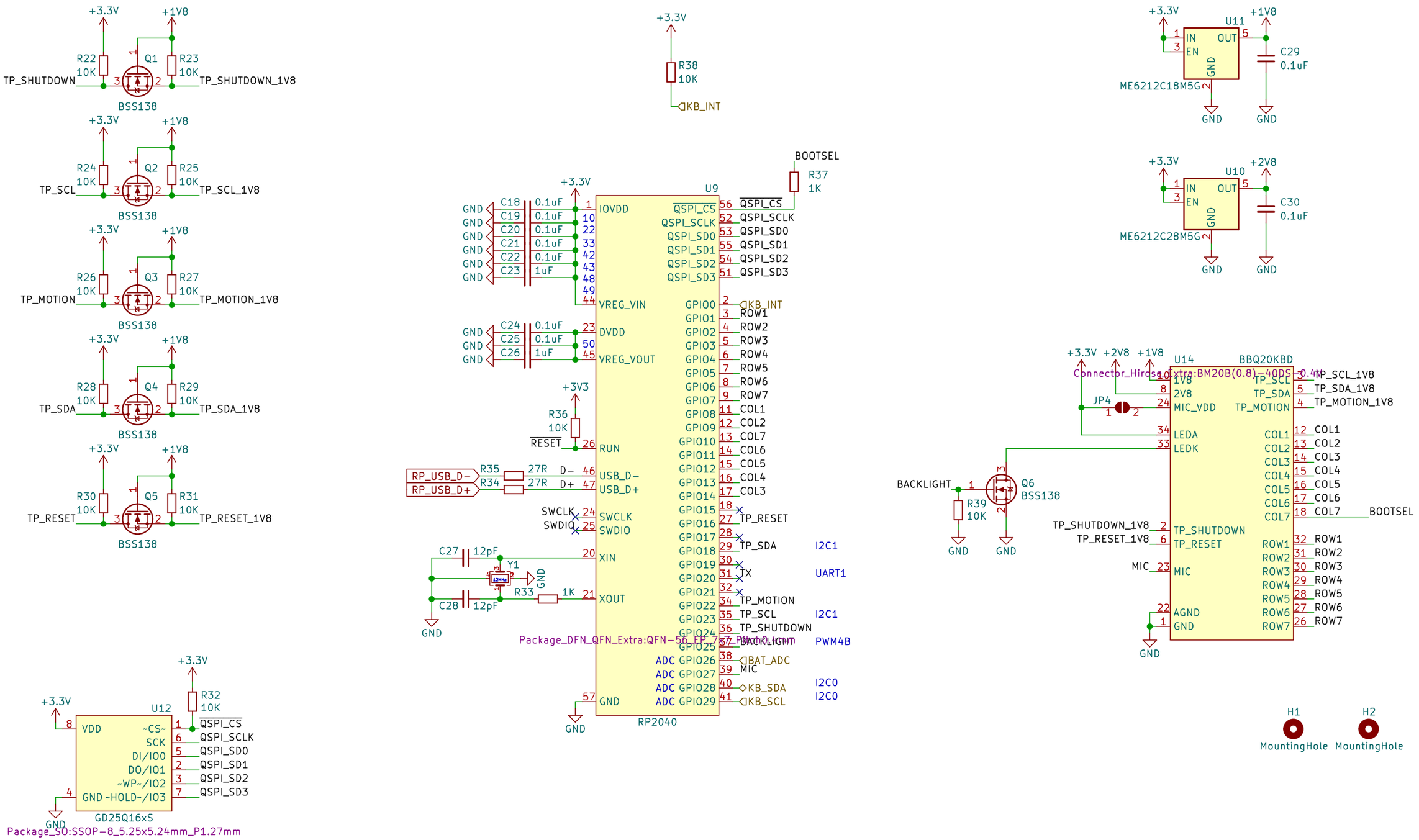
+3.3V
+1V8
R22
10K
Q1
R23
10K
TP_SHUTDOWN
TP_SHUTDOWN_1V8
BSS138
R24
10K
Q2
R25
10K
TP_SCL
TP_SCL_1V8
R26
10K
Q3
R27
10K
TP_MOTION
TP_MOTION_1V8
R28
10K
Q4
R29
10K
TP_SDA
TP_SDA_1V8
R30
10K
Q5
R31
10K
TP_RESET
TP_RESET_1V8
R38
10K
KB_INT
BOOTSEL
R37
1K
U9
C18 0.1uF
C19 0.1uF
C20 0.1uF
C21 0.1uF
C22 0.1uF
C23 1uF
C24 0.1uF
C25 0.1uF
C26 1uF
GND
IOVDD
VREG_VIN
DVDD
VREG_VOUT
QSPI_CS
QSPI_SCLK
QSPI_SD0
QSPI_SD1
QSPI_SD2
QSPI_SD3
GPIO0 KB_INT
GPIO1 ROW1
GPIO2 ROW2
GPIO3 ROW3
GPIO4 ROW4
GPIO5 ROW5
GPIO6 ROW6
GPIO7 ROW7
GPIO8 COL1
GPIO9 COL2
GPIO10 COL7
GPIO11 COL6
GPIO12 COL5
GPIO13 COL4
GPIO14 COL3
GPIO15 TP_RESET
GPIO16
GPIO17
GPIO18 TP_SDA I2C1
GPIO19
GPIO20 TX UART1
GPIO21
GPIO22 TP_MOTION
GPIO23 TP_SCL I2C1
GPIO24 TP_SHUTDOWN
GPIO25 BACKLIGHT PWM4B
ADC GPIO26 BAT_ADC
ADC GPIO27 MIC
ADC GPIO28 KB_SDA I2C0
ADC GPIO29 KB_SCL I2C0
+3V3
R36
10K
RESET
RUN
RP_USB_D−
RP_USB_D+
R35 27R D−
R34 27R D+
USB_D−
USB_D+
SWCLK
SWDIO
XIN
XOUT
C27 12pF
C28 12pF
Y1
12MHz
R33 1K
Package_DFN_QFN_Extra:QFN−56_EP_7x7mm_P0.4mm
RP2040
U11
IN
EN
OUT
GND
ME6212C18M5G
C29
0.1uF
U10
+2V8
ME6212C28M5G
C30
0.1uF
U14
BBQ20KBD
Connector_Hirose_extra:BM20B(0.8)−40DS−0.4V
JP4
1V8
2V8
MIC_VDD
LEDA
LEDK
TP_SCL
TP_SDA
TP_MOTION
COL1
COL2
COL3
COL4
COL5
COL6
COL7
BOOTSEL
TP_SHUTDOWN
TP_RESET
ROW1
ROW2
ROW3
ROW4
ROW5
ROW6
ROW7
MIC
AGND
BACKLIGHT
R39
10K
Q6
BSS138
TP_SHUTDOWN_1V8
TP_RESET_1V8
U12
R32
10K
VDD
~CS~
SCK
DI/IO0
DO/IO1
~WP~/IO2
GND ~HOLD~/IO3
GD25Q16xS
Package_SO:SSOP−8_5.25x5.24mm_P1.27mm
H1
H2
MountingHole
MountingHole